Hazard Definitions

These terms are used to bring attention to presence of hazards of various risk levels or to important information concerning product life.

CAUTION Indicates presence of hazards that will or can cause minor personal injury or property damage.

NOTICE Indicates special instructions on installation, operation or maintenance that are important but not related to personal injury hazards.

Table of Contents

Battery Conditions

NOTICE Until temperatures of electrical system components stabilize, these conditions may be observed during cold start voltage tests.

- **Maintenance/Low Maintenance Battery:**
  - Immediately after engine starts, system volts measure lower than regulator setpoint and system amps measure at a medium level.
  - 3-5 minutes into charge cycle, volts increase and amps decrease.
  - 5-10 minutes into charge cycle, volts reach regulator setpoint or very close, and amps decrease to a minimum.
  - Low maintenance battery has same characteristics with slightly longer recharge times.
- **Maintenance-free Battery:**
  - Immediately after engine starts, system volts measure lower than regulator setpoint with low charging amps.
  - Once the charge cycle begins, low volts and low amps are still present.
  - After the alternator energizes, voltage will increase several tenths. Amps will increase gradually, then quickly, to medium to high amps.
  - Finally, volts will increase to setpoint and amps will decrease.

  The time it takes to reach optimum voltage and amperage will vary with engine speed, load, and ambient temperature.
- **High-cycle Maintenance-free Battery:**
  - These batteries respond better than standard maintenance-free. Charge acceptance of these batteries may display characteristics similar to maintenance batteries.

Charge Volt and Amp Values

Volt and amp levels fluctuate depending on the battery state of charge. If batteries are in a state of discharge—as after extended cranking time to start the engine—system volts will measure lower than the regulator setpoint after the engine is restarted and system amps will measure higher. This is a normal condition for the charging system; the greater the battery discharge level, the lower the system volts and the higher the system amps. The volt and amp readings will change as batteries recover and become fully charged: system volts will increase to regulator setpoint and system amps will decrease to low level (depending on other loads).

- **Low Amps:** Minimum or lowest charging system amp value required to maintain battery state of charge, obtained when testing the charging system with a fully charged battery and no other loads applied. This value will vary with battery type.
- **Medium Amps:** System amps value which can cause the battery temperature to rise above adequate charging temperature within 4-8 hours of charge time. To prevent battery damage, the charge amps should be reduced when battery temperature rises. Check battery manufacturer's recommendations for proper charge amp rates.
- **High Amps:** System amps value which can cause the battery temperature to rise above adequate charging temperature within 2-3 hours of charge time. To prevent battery damage, the charge amps should be reduced when battery temperature rises. Check battery manufacturer's recommendations for proper charge amp rates.
- **Battery Voltage:** Steady-state voltage value as measured with battery in open circuit with no battery load. This value relates to battery state of charge.
- **Charge Voltage:** Voltage value obtained when the charging system is operating. This value will be higher than battery voltage and must never exceed the regulator voltage setpoint.
- **B+ Voltage:** Voltage value obtained when measuring voltage at battery positive terminal or alternator B+ terminal.
- **Surface Charge:** Higher than normal battery voltage occurring when the battery is disconnected from battery charger. The surface charge must be removed to determine true battery voltage and state of charge.
- **Significant Magnetism:** Change in strength or intensity of a magnetic field present in alternator rotor shaft when the field coil is energized. The magnetic field strength when the field coil is energized should feel stronger than when the field is not energized.
- **Voltage Droop or Sag:** Normal condition occurring when the load demand on alternator is greater than rated alternator output at given rotor shaft RPM.

CEN C706 Alternator Description and Operation

C706 28 V (300 A) alternator is internally rectified. All windings and current-transmitting components are non-moving, so there are no brushes or slip rings to wear out. Energize switch activates regulator. Field coil is then energized. Regulator maintains alternator output voltage at regulated setting as vehicle electrical loads are switched on and off. Alternator output current is self-limiting and will not exceed rated capacity of alternator.

A2-214 regulator has:

- D+ terminal that can provide signal to vehicle electrical system, confirming alternator operation.
- P terminal that can provide an optional AC voltage tap.
- Overvoltage cutout (OVCO). See page 4.
- Green lens LED. See page 4.

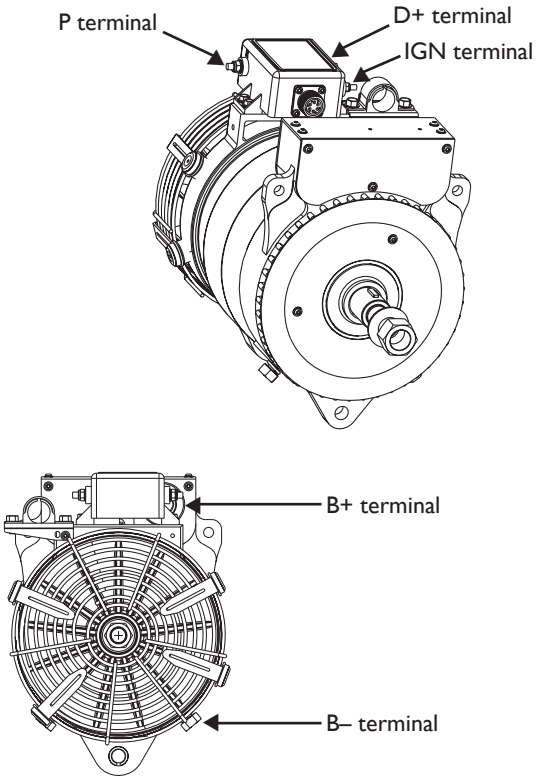

Figure 1 — C706 Alternator Terminals (Regulator Attached to Alternator)

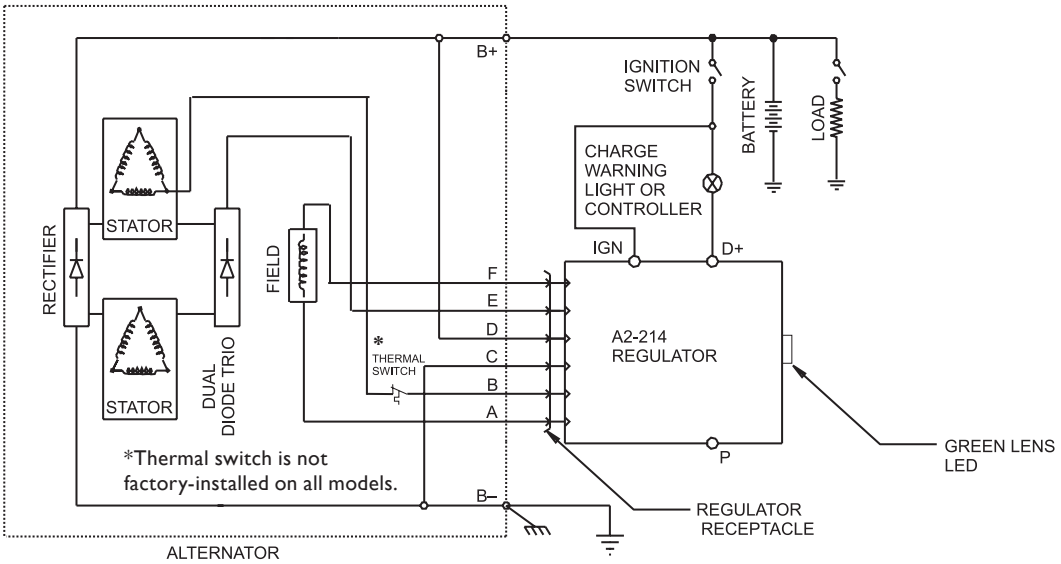

Figure 2 — C706 Alternator with Regulator

Tools and Equipment for Job

- Digital Multimeter (DMM)
- Ammeter (digital, inductive)
- Jumper wires

Identification Record

List the following for proper troubleshooting:

❒ Alternator model number _____

❒ Regulator model number _____

❒ Setpoints listed on regulator _____

Preliminary Check-out

Check symptoms in Table 1 and correct if necessary.

TABLE 1 – System Conditions

SYMPTOM	ACTION
Low Voltage Output	Check: loose drive belt; low battery state of charge. Check: current load on system is greater than alternator can produce. Check: defective wiring or poor ground path; low regulator setpoint. Check: defective alternator and/or regulator. Check: wrong regulator.
High Voltage Output	Check: high regulator setpoint. Check: defective regulator. Check: alternator.
No Voltage Output	Check: broken drive belt. Check: battery voltage at alternator output terminal. Check: continuity of thermal switch inside control unit. Check: defective alternator and/or regulator.

NOTICE Failure to check for the following conditions will result in erroneous test results in the troubleshooting charts.

Basic Troubleshooting

1. **Inspect charging system components for damage**
   Check connections at B– cable, B+ cable, and regulator harness. Also check connections at regulator terminal wiring from regulator to vehicle components. Repair or replace any damaged component before electrical troubleshooting.
2. **Inspect vehicle battery connections**
   Connections must be clean and tight.
3. **Check drive belt**
   Repair or replace as necessary.
4. **Determine battery voltage and state of charge**
   If batteries are discharged, recharge or replace batteries as necessary. Electrical system cannot be properly tested unless batteries are charged 95% or higher.
5. **Connect meters to alternator**
   Connect red lead of DMM to alternator B+ terminal and black lead to alternator B– terminal. Clamp inductive ammeter on B+ cable.
6. **Operate vehicle**
   Observe charge voltage.

   CAUTION If charge voltage is above 32 volts, immediately shut down system. Electrical system damage may occur if charging system is allowed to operate at high voltage. Go to Table 1.

   If voltage is at or below regulator setpoint, let charging system operate for several minutes to normalize operating temperature.
7. **Observe charge volts and amps**
   Charge voltage should increase and charge amps should decrease. If charge voltage does not increase within ten minutes, continue to next step.
8. **Battery** is considered fully charged if charge voltage is at regulator setpoint and charge amps remain at lowest value for 10 minutes.
9. **If charging system** is not performing properly, go to Chart 2, page 6.

A2-214 Regulator

DESCRIPTION AND OPERATION

A2-214 regulator is either attached directly to the outside of alternator or remote-mounted.

Main diagnostic feature of regulator is a green lens LED located on the front of the regulator. LED indicates whether regulator has been energized. See Table 2 for LED indication and status.

Regulators with OVCO (overvoltage cutout) will trip at vehicle electrical system voltages **above** 32 volts that exist longer than 3 seconds. OVCO feature detects high voltage and reacts by signaling the F+ alternator circuit to open. This turns off alternator. Restarting engine resets OVCO circuit. Regulator regains control of alternator output voltage.

TABLE 2—A2-214 Regulator LED Indications and Status

INDICATION	STATUS
ON steady	Normal regulator operation. Alternator is producing output.
FLASHING	Regulator is receiving energize signal. LED will flash until alternator produces output.
OFF	Regulator is not receiving energize signal or OVCO has tripped.

TROUBLESHOOTING

Shut down vehicle and restart engine. If alternator functions normally after restart, a “no output condition” was normal response of voltage regulator to “high voltage” condition. Inspect condition of electrical system, including loose battery cables, both positive and negative. If battery disconnects from system, it could cause “high voltage” condition in electrical system, causing OVCO circuit to trip.

If you have reset alternator once and electrical system returns to normal charge voltage condition, there may have been a one time, high voltage spike, causing OVCO circuit to trip.

If OVCO circuit repeats cutout a second time in short succession and shuts off alternator F+ circuit, try third restart. If OVCO circuit repeats cutout, go to page 6.

REMOTE-MOUNTED REGULATORS: CHECK CONDITION OF FUSE IN WIRING HARNESS BEFORE TROUBLESHOOTING

Chart 1 – No Alternator Output – Quick Diagnostic

With engine running, does battery voltage exist at alternator B+ terminal and regulator IGN terminal?

- **No** → Repair vehicle harness circuit to IGN terminal on regulator or B+ terminal on alternator.
- **Yes** ↓

CAUTION When conducting this step, ensure that the probes do not touch other pins, as an arc may damage the wiring in the harness.

Engine off, key off: Unplug alternator-to-regulator harness. Connect DMM across pin D and pin C in harness plug. Does battery voltage exist?

- **No** → Alternator is defective.
- **Yes** ↓

With DMM on resistance scale, ensure that the field resistance measured between pins F and A in harness plug is about 1.2 (±0.2) ohms.

- **No** → Alternator is defective.
- **Yes** ↓

Install a jumper from pin F in harness plug to B+ terminal on alternator. Momentarily (1 sec.) jumper pin A in harness plug to alternator B– terminal. Touch shaft with steel tool to detect significant magnetism. Is shaft magnetized?

- **Yes** → Regulator is defective.
- **No** → Go to Chart 2, page 6.

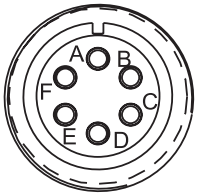

PIN CONNECTIONS

Pin A	F–
Pin B	Phase
Pin C	B–
Pin D	B+
Pin E	D+
Pin F	F+

Figure 3 – Alternator-to-Regulator Harness Plug

Chart 2 – No Alternator Output – Test Charging Circuit

STATIC TEST – ENGINE OFF, BATTERY SWITCH ON, KEY ON.
REMOTE-MOUNTED REGULATORS: CHECK CONDITION OF FUSES IN WIRING HARNESS BEFORE TROUBLESHOOTING

Test for battery voltage at alternator B+ terminal. Does battery voltage exist?

- Yes → With engine running: Test for battery voltage at regulator IGN terminal. Does battery voltage exist?
- No → Repair vehicle wiring as necessary. Continue test. → With engine running: Test for battery voltage at regulator IGN terminal. Does battery voltage exist?

With engine running: Test for battery voltage at regulator IGN terminal. Does battery voltage exist?

- Yes → CAUTION
- No → Repair vehicle wiring as necessary. Re-test.

CAUTION When conducting this step, ensure that the probes do not touch other pins, as an arc may damage the wiring in the harness.

Unplug alternator-to-regulator harness. Connect DMM across pin D and pin C in harness plug. Does battery voltage exist?

- Yes → Connect black lead of DMM to pin E in harness plug. Connect red lead to B-terminal on alternator. DMM should read voltage drop. Reverse leads. DMM should read OL.
- No → Alternator is defective.

Connect black lead of DMM to pin E in harness plug. Connect red lead to B-terminal on alternator. DMM should read voltage drop. Reverse leads. DMM should read OL.

- Yes → Set DMM to Diode Test. Connect red lead to pin B in harness plug. Connect black lead to B+ terminal on alternator. Does continuity exist?
- No → Alternator is defective.

Set DMM to Diode Test. Connect red lead to pin B in harness plug. Connect black lead to B+ terminal on alternator. Does continuity exist?

- Yes → With DMM on resistance scale, ensure that the field resistance measured between pins F and A in harness plug is about 1.2 (±0.2) ohms.
- No → Go to Chart 3, page 7.

With DMM on resistance scale, ensure that the field resistance measured between pins F and A in harness plug is about 1.2 (±0.2) ohms.

- Yes → Install a jumper from pin F in harness plug to B+ terminal on alternator. Momentarily (1 sec.) jumper pin A in harness plug to alternator B– terminal. Touch shaft with steel tool to detect significant magnetism. Is shaft magnetized?
- No → Alternator is defective.

Install a jumper from pin F in harness plug to B+ terminal on alternator. Momentarily (1 sec.) jumper pin A in harness plug to alternator B– terminal. Touch shaft with steel tool to detect significant magnetism. Is shaft magnetized?

- Yes → Regulator is defective.
- No → Alternator is defective.

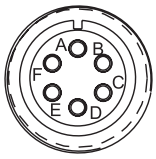

PIN CONNECTIONS

Pin A	F–
Pin B	Phase
Pin C	B–
Pin D	B+
Pin E	D+
Pin F	F+

Figure 4 – Alternator-to-Regulator Harness Plug

Chart 3 – Continuation of Chart 2 as Noted

Set DMM to diode test. Connect black lead of DMM to B+ terminal on alternator. Connect red lead to pin B on harness plug. DMM should read voltage drop. Reverse leads. DMM should read OL.

- **Yes** → Repair vehicle circuit to IGN terminal. Vehicle charging circuit test is complete.
- **No** → Check continuity of thermal switch inside control unit: Remove drive end cover on alternator. With DMM, check continuity between pin B on harness plug and diode shown in Figure 5 below. Does continuity exist?
  - **Yes** → Alternator is defective.
  - **No** → Thermal switch in control unit is defective.

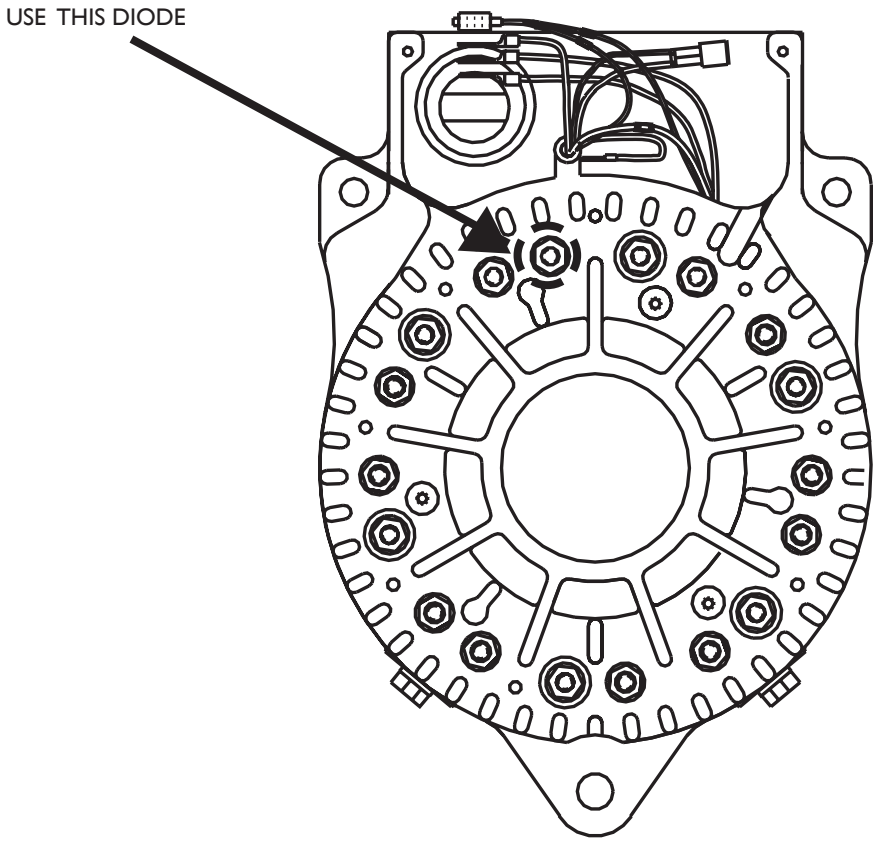

Figure 5 – Diode Arrangement inside Drive End Housing